HYPERLABS™
Innovation at Hyperspeed since 1992

HL9479 Resistive Power Divider (DC to 110 GHz)

Features and Technical Specifications[1]

Bandwidth	DC to 110GHz
Insertion Loss (AC) Maximum *See Fig. 1*	< 7 dB, DC < f ≤ 50 GHz < 8 dB, 50 < f ≤ 85 GHz < 9 dB, 85 < f ≤ 110 GHz
Return Loss Typical *See Fig. 2*	15 dB, DC < f ≤ 50 GHz 12 dB, 50 < f ≤ 90 GHz 10 dB, 90 < f ≤ 105 GHz
Amplitude Match Typical *See Fig. 1*	± 0.2 dB, DC < f ≤ 70 GHz ± 0.4 dB, 70 < f ≤ 110 GHz
Phase Match *See Fig. 3*	typ < ± 2°, max < ± 5°, DC < f ≤ 50 GHz typ < ± 4°, max ± 8°, 50 < f ≤ 85 GHz typ < ± 6°, max < ± 10°, 85 < f ≤ 110 GHz
Rise Time	3 ps
Insertion (Group) Delay	116 ps, all ports See *Fig. 4*
Max Input Power	20 dBm (24 dBm max)[2]
Impedance	50 Ω ± 5%
Connectors	1.0 mm, 3 x jack/female Plug/male also available
Dimensions *See Fig. 5*	1.139” x 0.99” x 0.463” 28.9 x 25.1 x 11.76 mm
Weight	14 g, (0.49 oz.)
Temperature Limits	-40° to +50° C, operating
RoHS Compliant	Yes, assembled with lead-free solder
REACH Compliant	Yes
Warranty	1 year, see website

1 - The specifications in this table are typical for Model Number HL9479 using the standard connector configuration (3 x jack). Specificatons may vary slightly for other configurations.

2 - Long-term power handling testing is ongoing. The preliminary specification is 20 dBm.



HL9479

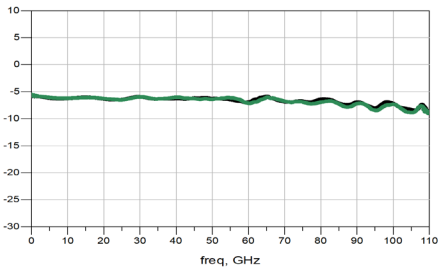

Typical HL9479 Insertion Loss

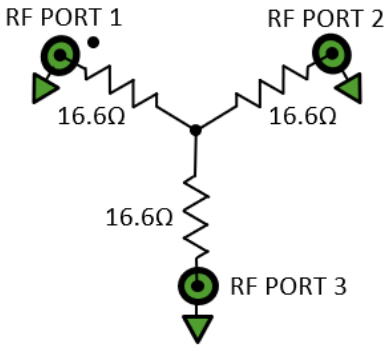

HL9479 Schematic and Port Assignments

PRODUCT SUMMARY

The HL9479 is an ultra-broadband 6 dB power divider that provides outstanding amplitude- and phase-symmetrical power division from DC to beyond 110 GHz.

This product is designed using a three-resistor network resulting in outputs that are nominally attenuated to 6 dB, and all ports are impedance-matched to 50 Ohms when the ports are terminated.

They are suitable for use in 224 Gbps PAM4 communications systems, high-speed analog-to-digital conversion, frequency response testing for differential devices, and many other applications.

DEPLOYMENT NOTES

The ports of the HL9479 are symmetrical and the device can be used in any direction.

MODELS & OPTIONS

The following model is available:

HL9479, 110 GHz

The following connector options are available:

- ***-JJJ,*** 3 x jack
- ***-JPP***, jack/plug/plug
- ***-PJJ***, plug/jack/jack
- ***-PPP***, 3 x plug

HL9479 Plot Diagrams

Figures 1-4 show the typical S-parameter characteristics and group delay of an HL9479. The HL9479 is matched to 50 Ω on all ports. Port 1 is specified with a dot on the label, and Ports 2 and 3 are matched.

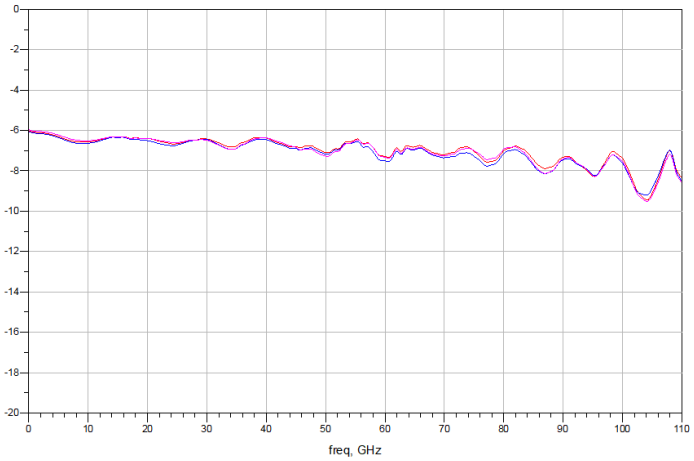

Figure 1: Typical HL9479 Bandwidth and Amplitude Match

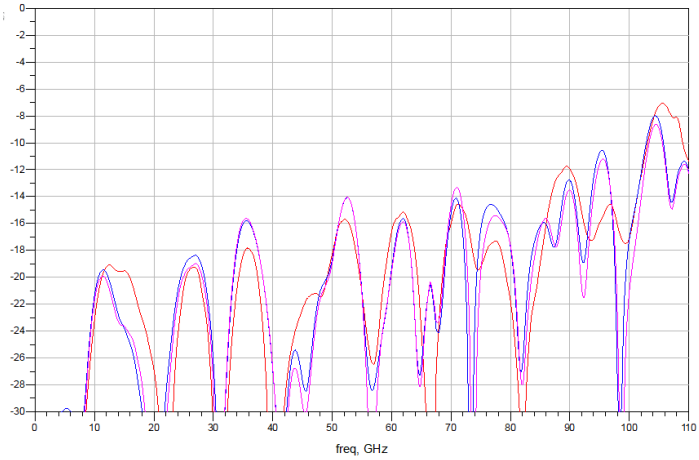

Figure 2: Typical HL9479 Return Loss

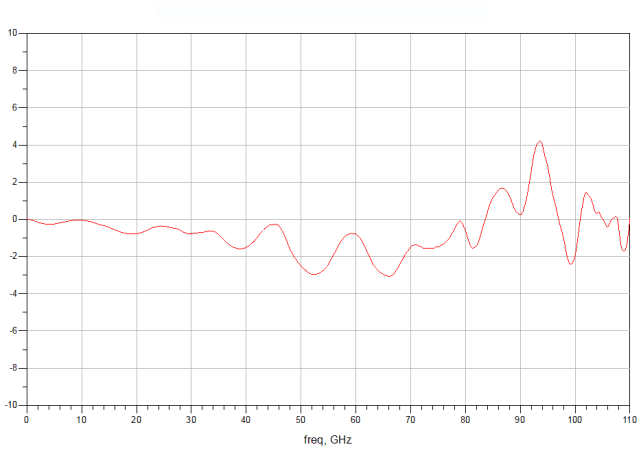

Figure 3: Typical HL9479 Phase Mismatch

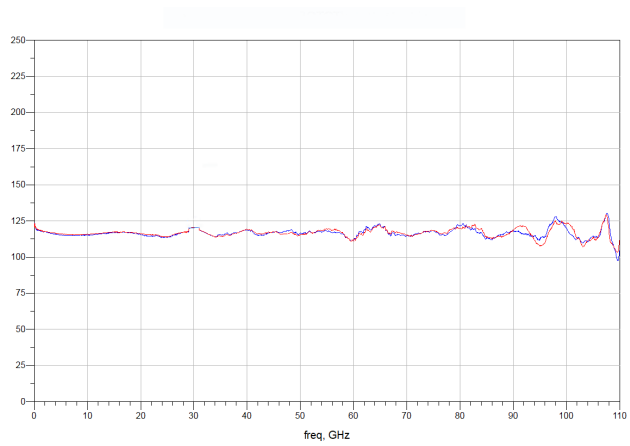

Figure 4: Typical HL9479 Group Delay

HL9479 Dimensional Drawing

Figure 5 shows a mechanical drawing of an HL9479. Unless otherwise noted, all units are shown in inches. Other models vary in length and width based on connectors.

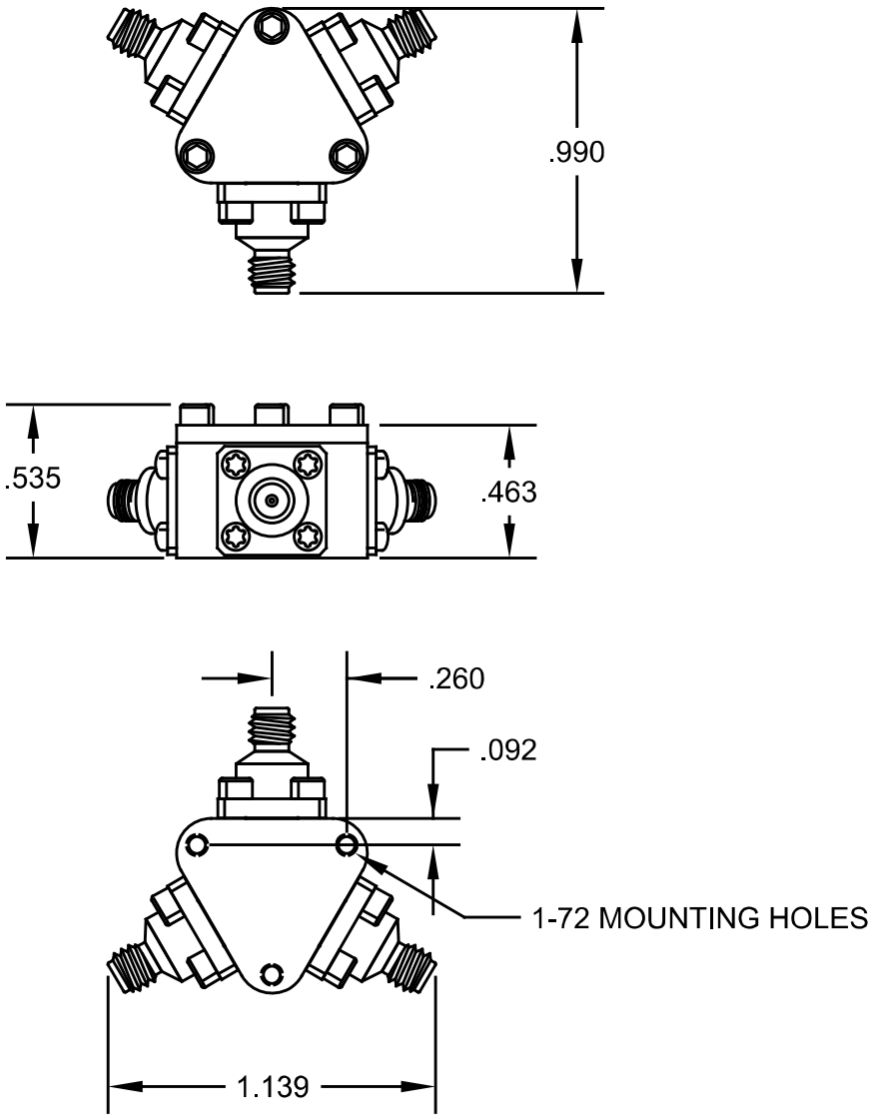

Figure 5: HL9479 Mechanical Drawing