HYPERLABS™
Innovation at Hyperspeed since 1992

HL9489 Resistive Power Splitter (DC to 100 GHz)

Features and Technical Specifications[1]

Bandwidth	DC to 100GHz
Insertion Loss (AC) Maximum *See Fig. 1*	< 7 dB, DC < f ≤ 50 GHz < 8 dB, 50 < f ≤ 75 GHz < 9 dB, 75 < f ≤ 100 GHz
Return Loss Input port 1 *See Fig. 2*	15 dB, DC < f ≤ 58 GHz 12 dB, 58 < f ≤ 85 GHz 10 dB, 85 < f ≤ 100 GHz
Amplitude Match Typical *See Fig. 1*	± 0.1 dB, DC < f ≤ 70 GHz ± 0.3 dB, 70 < f ≤ 100 GHz
Phase Match *See Fig. 4*	typ < ± 2°, max < ± 5°, DC < f ≤ 50 GHz typ < ± 4°, max ± 8°, 50 < f ≤ 85 GHz typ < ± 6°, max < ± 10°, 85 < f ≤ 100 GHz
Rise Time	3 ps
Insertion (Group) Delay	117 ps, all ports See *Fig. 3*
Max Input Power	20 dBm (24 dBm max)[2]
Impedance	50 Ω ± 5%
Connectors	1.0 mm, 3 x jack/female Plug/male also available
Dimensions *See Fig. 5*	1.139" x 0.99" x 0.463" 28.9 x 25.1 x 11.76 mm
Weight	14 g, (0.49 oz.)
Temperature Limits	-40° to +50° C, operating
RoHS Compliant	Yes, assembled with lead-free solder
REACH Compliant	Yes
Warranty	1 year, see website

1 - The specifications in this table are typical for Model Number HL9489 using the standard connector configuration (3 x jack). Specificatons may vary slightly for other configurations.

2 - Long-term power handling testing is ongoing. The preliminary specification is 20 dBm.



HL9489

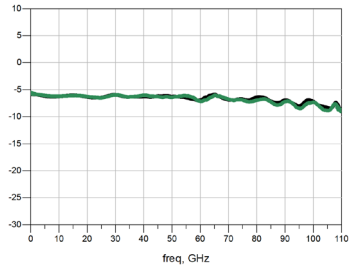

Typical HL9489 Insertion Loss

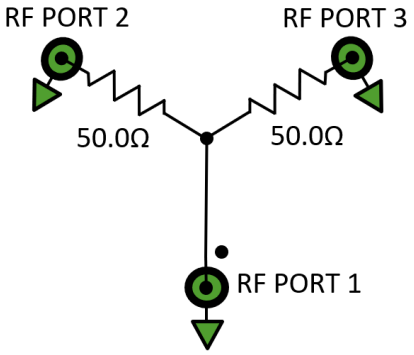

HL9489 Schematic and Port Assignments

PRODUCT SUMMARY

The HL9489 is an ultra-broadband symmetrical, two-resistor power splitter that provides outstanding amplitude and phase-symmetrical power division from DC to beyond 100 GHz. The splitters also provide exceptional band flatness and return loss across the frequency range.

These parts are suitable for making power ratio measurements as accuracy of the divided outputs is extremely well tracked. The precision of the divided outputs allows for measurements to be taken with a high level of ratio-metric certainty.

They are applicable for levelling applications in transmission measurements, or reflection measurements with the use of a bridge.

DEPLOYMENT NOTES

If used in the reverse direction, the device can be used as a combiner.

MODELS & OPTIONS

The following model is available:

HL9489, 100 GHz

The following connector options are available:

- ***-JJJ,*** 3 x jack
- ***-JPP***, jack/plug/plug
- ***-PJJ***, plug/jack/jack
- ***-PPP***, 3 x plug

HL9489 Plot Diagrams

Figures 1-4 show the typical S-parameter characteristics and group delay of an HL9489. The HL9489 is matched to 50 Ω on all ports. Port 1 is specified with a dot on the label, and Ports 2 and 3 are matched.

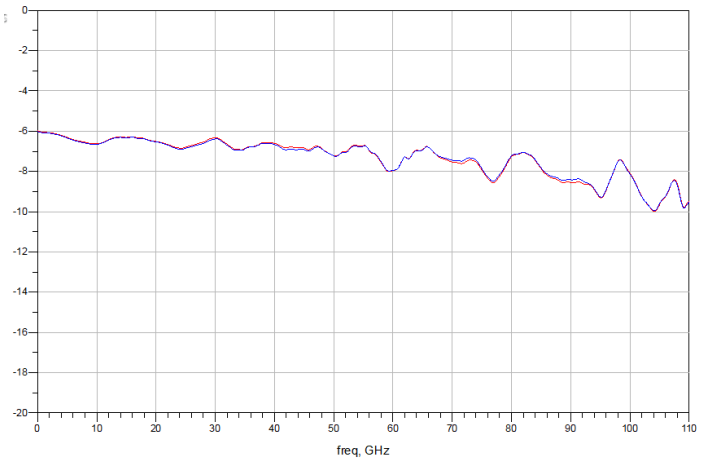

Figure 1: Typical HL9489 Bandwidth and Amplitude Match

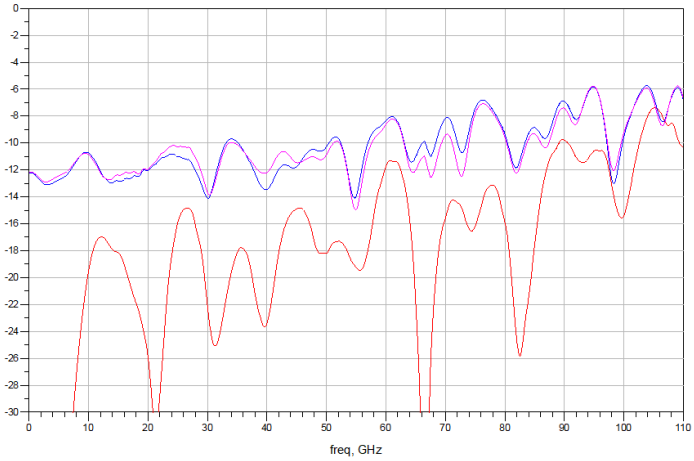

Figure 2: Typical HL9489 Return Loss

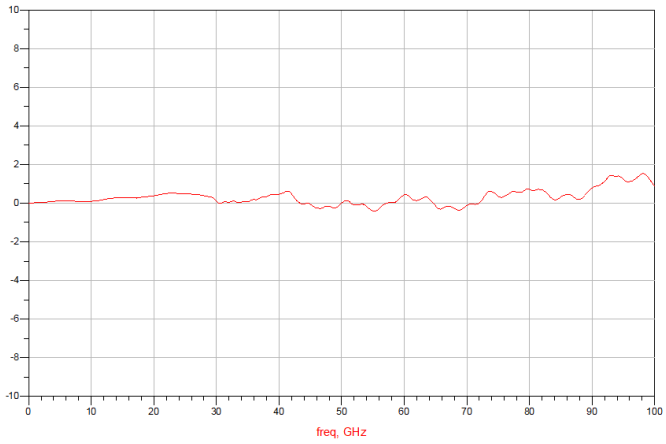

Figure 3: Typical HL9489 Phase Mismatch

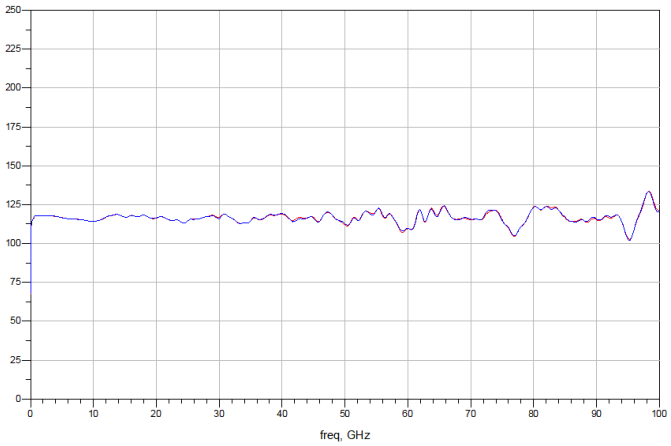

Figure 4: Typical HL9489 Group Delay

HL9489 Dimensional Drawing

Figure 5 shows a mechanical drawing of an HL9489. Unless otherwise noted, all units are shown in inches. Other models vary in length and width based on connectors.

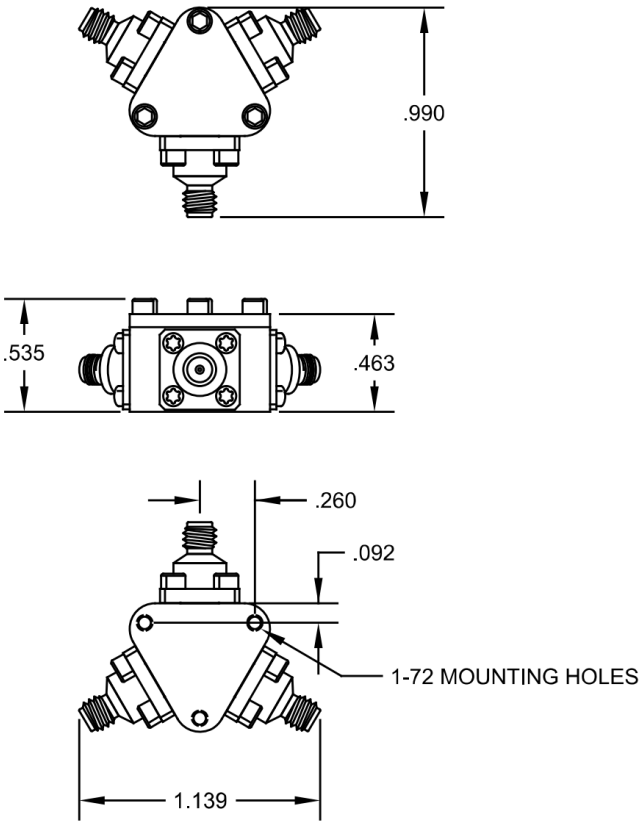

Figure 5: HL9489 Mechanical Drawing