KRYTAR, INC. • www.krytar.com
1288 Anvilwood Avenue • Sunnyvale, CA 94089 • Toll FREE: +1.877.734.5999 • FAX: +1.408.734.3017 • E-mail: sales@krytar.com

REVISIONS			
LTR	DESCRIPTION	DATE	APPROVED

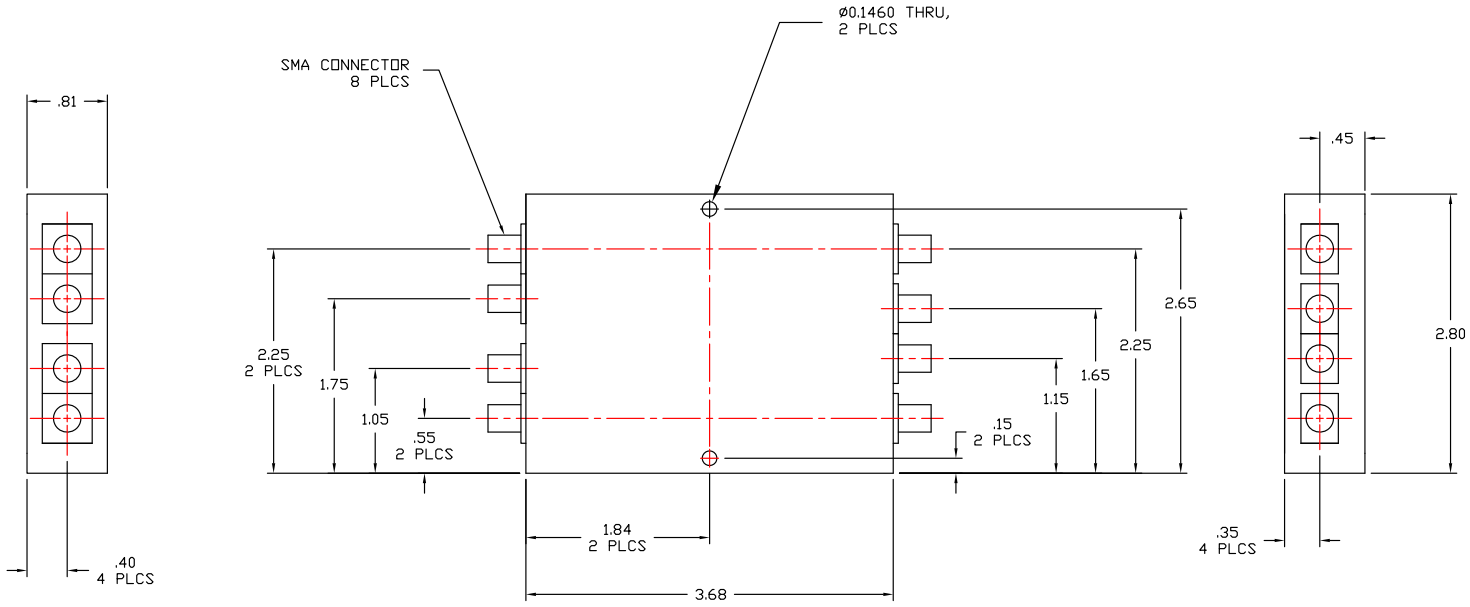

(DIMENSIONS IN INCHES)

MATERIAL- 6061 ALUMINUM		APPROVALS	DATE	TITLE	BUTLER MATRIX OUTLINE
TOLERANCE ARE AS FOLLOWS UNLESS OTHERWISE NOTED:		DRAWN W. HERERIA	7-8-22		MODEL KBM9100400/9180400/9240300/9300400
		REDRAWN			
.XX - ±.010		APPROVED		KRYTAR	SIZE B / DRAWING NO. 135-0386-000 / REV
.XXX - ±.002					SCALE 1/1 / SHEET 1 OF 1

FILE: DWG.0386- 75