KRYTAR, INC. • www.krytar.com
1288 Anvilwood Avenue • Sunnyvale, CA 94089 • Toll FREE: +1.877.734.5999 • FAX: +1.408.734.3017 • E-mail: sales@krytar.com

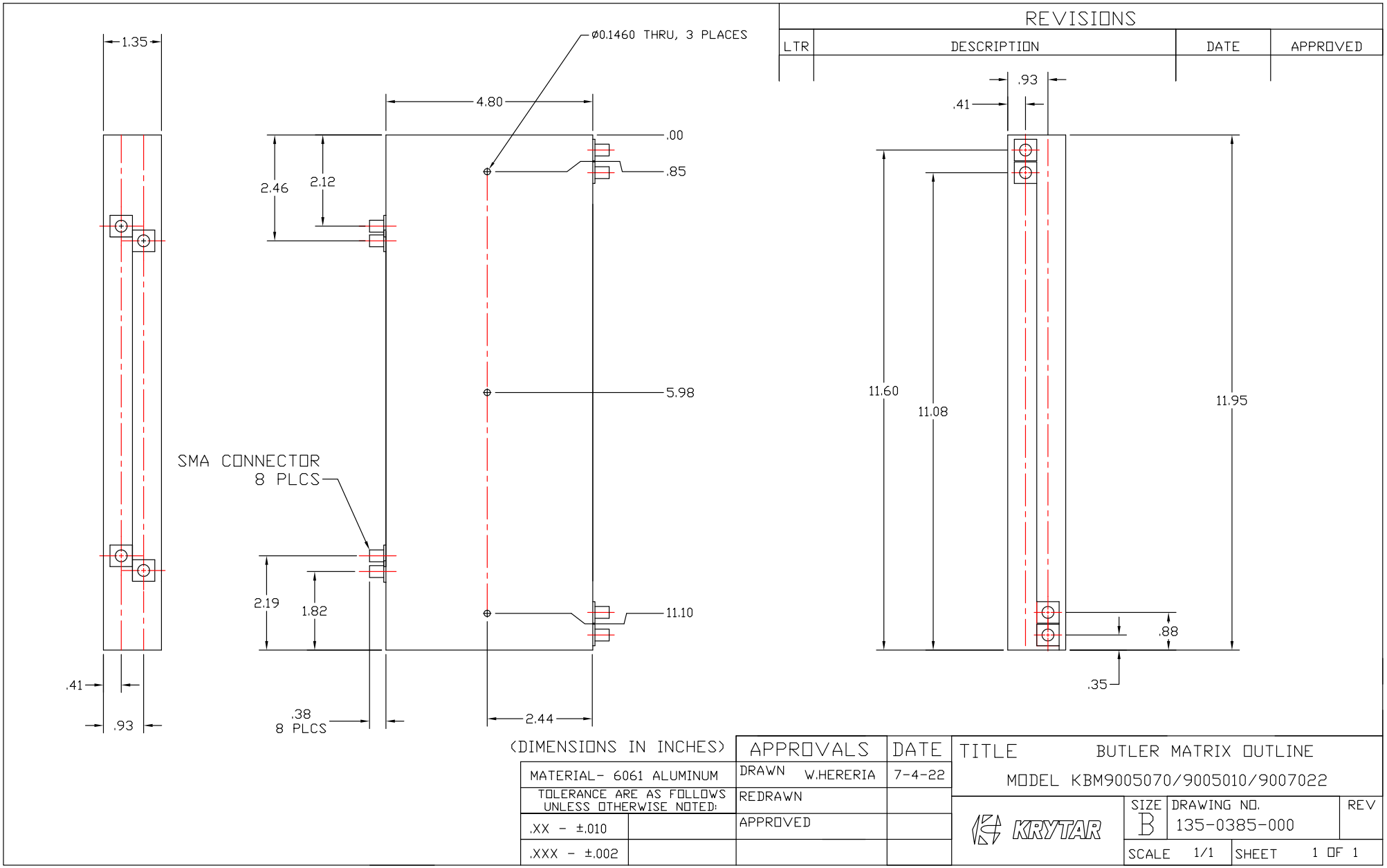

REVISIONS			
LTR	DESCRIPTION	DATE	APPROVED

(DIMENSIONS IN INCHES)

APPROVALS		DATE
MATERIAL- 6061 ALUMINUM	DRAWN W.HERERIA	7-4-22
TOLERANCE ARE AS FOLLOWS UNLESS OTHERWISE NOTED:	REDRAWN	
.XX - ±.010	APPROVED	
.XXX - ±.002		

TITLE BUTLER MATRIX OUTLINE
MODEL KBM9005070/9005010/9007022

KRYTAR

SIZE	DRAWING NO.	REV
B	135-0385-000	
SCALE 1/1	SHEET 1 OF 1	

FILE: 0385.DWG-75