KRYTAR, INC. • www.krytar.com
1288 Anvilwood Avenue • Sunnyvale, CA 94089 • Toll FREE: +1.877.734.5999 • FAX: +1.408.734.3017 • E-mail: sales@krytar.com

REVISIONS			
LTR	DESCRIPTION	DATE	APPROVED

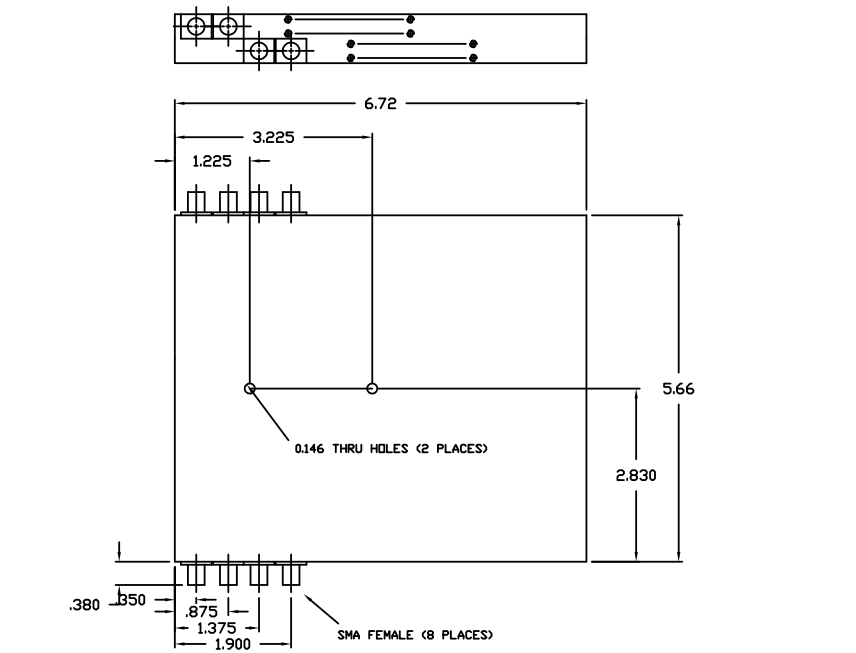

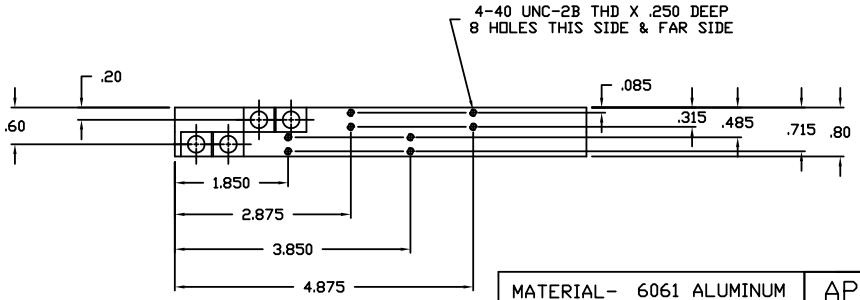

DIMENSIONS IN INCHES

MATERIAL- 6061 ALUMINUM		APPROVALS	DATE	TITLE	MONOPULSE COMPARATOR RFM010180 OUTLINE
TOLERANCE ARE AS FOLLOWS UNLESS OTHERWISE NOTED:		DRAWN MIKE R.	10-24-23		
		CHECKED			
.XX - ±.010	∠'S - ±1°	APPROVED		KRYTAR	SIZE B / DRAWING NO. 120-0426-000 / REV
.XXX - ±.005					SCALE 2/1 / SHEET 1 OF 1

FILE: 0426.DWG-110